"Color Biofinder" for fast, non-contact detection of biomaterials in Ocean Worlds

A. K. Misra[1], G. Berlanga[1], T. E. Acosta-Maeda[1], S. K. Sharma[1], P. G. Lucey[1], G. J. Taylor[1], L. Flynn[1], J. Porter[1], D. Garmire[2], C. P. McKay[3], R. C. Wiens[4], S. M. Clegg[4], P. J. Gasda[4], and M. N. Abedin[5], [1]Hawaii Institute of Geophysics and Planetology, Univ. of Hawaii at Mānoa, Honolulu, HI 96822, USA; [2]Department of Electrical Engineering, Univ. of Hawaii at Mānoa, Honolulu, HI 96822, USA; [3]NASA Ames Research Center, Moffett Field, CA 94035, USA; [4]Los Alamos National Laboratory, Los Alamos, NM 87545, USA; [5]NASA Langley Research Center, Hampton, VA 23681, USA. anupam@hawaii.edu

Introduction: We have developed an instrument called ñStandoff Biofinderò which is able to detect biomolecules and bio-markers from a collection of rocks and minerals in a large area with detection time of 0.1 s [1-3]. The Standoff Biofinder takes advantage of the short lifetime of bio-fluorescent materials [4] to obtain real-time images showing the locations of biological materials among luminescent minerals in a geological context. The instrument works in daylight as well as nighttime conditions and its bio-detection capability is not affected by the background light. One of the important features of the biofinder instrument is its capability to separate out bio-fluorescence from mineral luminescence. The interference from mineral luminescence has been an issue for detecting biological materials [5].

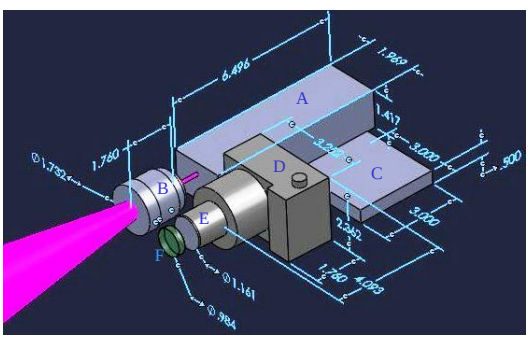

Fig. 1: The schematic design of color-biofinder. A: laser, B: beam expander, C: custom electronics, D: mini-ICCD/gated color camera, E: imaging optics, F: filters

In this abstract, we present the next generation of the instrument called ñColor Biofinderò. The Color Biofinder provides color fluorescent images, using simple Bayer color filters, of biological species in a target area. One of the advantages of the color biofinder over the previous biofinder system would be ability to differentiate multiple biological materials in a target area which may contain a mixture of biological species. The instrument will be helpful in identifying the biological materials based on their fluorophore colors, along with morphologies. The Standoff Biofinder instrument will be suitable for locating fluorescent polyaromatic hydrocarbons, amino acids, proteins, bacteria, biominerals, photosynthetic pigments, and diagenetic products of microbial life both on dry landscapes as well as on Ocean Worlds of the outer Solar System (e.g., Enceladus, Europa, and Titan).

Fig. 2: Detector unit of the color biofinder system using a compact color CMOS camera, 1ò diameter collection lens and optical filters. Size 12 cm x 4.3 cm x 2.9 cm, weighs 147 g.

System description and experimental details: The standoff biofinder instrumentation uses a nano-second pulse laser to illuminate distant target materials. The laser beam is expanded to illuminate a large sample region. A gated detector equipped with a focusing lens is used to record time-resolved fluorescence images. The timing of the detector is synchronized with the pulsed laser. A notch filter is used in front of the focusing lens to reject the laser wavelength. The schematic diagram of the standoff biofinder instrument using a mini-ICCD detector is shown in Figure 1. The working principle of the biofinder system is discussed in detail in Misra et al., 2016 [3]. Since bio-fluorescence signals are very strong, biofinder system can be developed using compact color CMOS detector. Figure 2 shows a gated color CMOS detector used for taking data for this abstract. The entire detector unit with 1ò diameter imaging lens and filters has dimension of 12 x 4.3 x 2.9 cm^3 and weighs 147 g. The data presented in this abstract were recorded from a target distance of 50 cm with single laser pulse illumination using a Nd-YAG pulsed laser capable of simultaneously generating 355 nm and 532 nm pulses. Laser beam was expanded to a diameter of 12 cm, and samples were excited with total pulse energy of 1.6 mJ @ 355 nm plus 10.8 mJ @ 532 nm.

Results and discussion: Figure 3 (top image) shows a coral sample submerged inside 1000 ml of ocean water from the Pacific Ocean inside a glass beaker at a depth

of 8 cm. The top image was taken by the color CMOS camera without any laser excitation from a 50 cm distance. The bottom image shows the bio-fluorescence image taken by the same camera from the same distance using a single laser pulse for fluorescence excitation with room lights on and fast gating of the detector. With the color bio-fluorescence imaging it is possible to detect several biological species based on their fluorophore color along with the morphologies. Because the blue green wavelengths can travel through depth of several meters in clear water, it is possible to look for biological materials in ocean and rivers using the biofinder system. It will be also useful for detecting bioresidues in the submerged soil and rocks in shallow water.

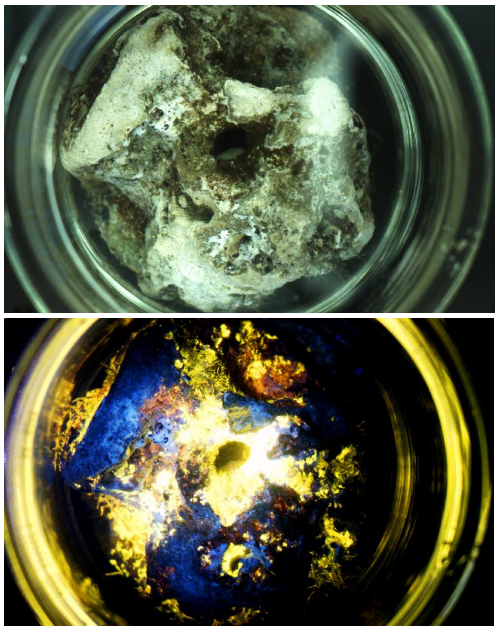

Fig. 3: Color bio-fluorescence imaging (bottom image) in seawater. Top image shows the submerged coral sample in 1000 ml of ocean water at depth of 8 cm. The biological diversity in the coral sample is seen in the color fluorescent image taken from a distance of 50 cm. Single laser pulse excitation and detection.

For icy planets, such as Europa, it will be possible to look through several centimeters of ice to locate submerged biological materials and their residues. Figure 4 shows bio-detection of marine corals and ocean plants through frozen semi-transparent ice. To obtain this data, marine corals and plants were submerged in a 1000 ml beaker of Pacific Ocean water and was frozen using a refrigerator. The ice block was then removed from the beaker. The top image shows the color image of the ice block (ice diameter = 12 cm) with white light illumination. The submerged objects at several centimeters depths are seen as blurry images. The bottom image taken by the biofinder instrument from a distance of 50 cm shows the locations of biological materials inside ice using fast fluorescence imaging mode with single laser pulse excitation and detection.

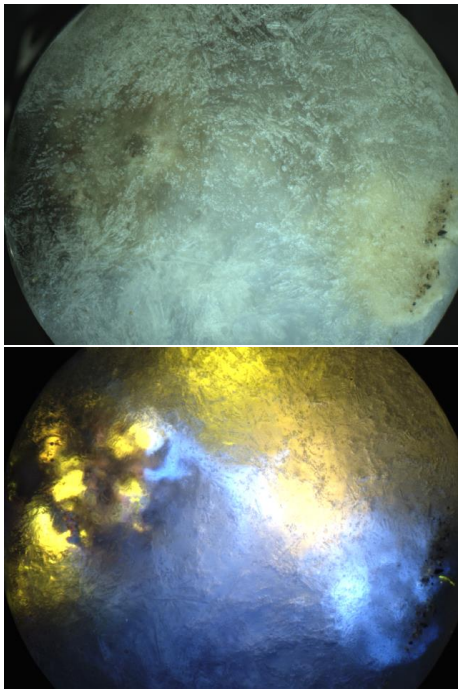

Fig.4: Standoff detection of submerged biological materials inside ice using biofinder system from 50 cm distance. Top image: White light image showing frozen ice and submerged corals and sea plants. Bottom image: Biofinder image (bottom image) showing the location of submerged bio-fluorescent materials inside ice as bright areas. (Ice diameter = 12 cm). Single laser pulse excitation and detection.

Summary: The standoff color biofinder instrument is especially of interest to future NASA missions to Ocean Worlds for rapid detection of biological materials in water and ice. Due to penetration of blue green laser light in water and semi-transparent ice, it is possible to detect biological materials which are submerged in ice and water at the depth of several centimeters with detection time less than 1 ms. The color standoff biofinder system will be a suitable ñsearch of lifeò instrument for non-destructive, day operation, and fast detection, of biological materials for planetary exploration, without sample collection.

Acknowledgments: This work has been supported by NASA EPSCoR grant NNX13AM98A, NSF grant óIke Wai and Mars 2020 mission.

References: [1] Misra, A. K., et al. (2012), *43rd LPSC*, Abstract#1666. [2] Misra, A.K., et al. (2014) *45th LPSC*, Abstract#1498. [3] Misra, A.K., et al. (2016) *Astrobiology, 16 (9), 715-729.* [4] D. M. Jameson (2014) ñIntroduction to Fluorescenceò, CRC, NY. [5] Smith, H.D. (2012) *Astrobiology* 12, 247-257.