Utilization of In-situ Resources and Transported Materials for Infrastructure and Hardware Manufacturing on the Moon – Ongoing Developments by ESA Materials Scientists

Laurent Pambaguian, Advenit Makaya*, Ugo Lafont
ESA – ESTEC – Components Technology & Space Materials Division

01/11/2016

Introduction

- **Materials** are key aspects in the design of missions for exploration and the establishment of **sustainable** settlements on the Moon (or Mars)

- **Maximise** the use of Material resources available at destination
  - ☞ Substantial **savings** in payload **mass, cost** and mission **complexity**
  - ☞ **Reduce dependence** on cargo

- **In-situ Resource Utilisation** (ISRU) for building of habitat and supporting structures (e.g. landing pads, shielding walls, antenna towers…)
  - ☞ Enables establishment and expansion of settlement
  - ☞ Various technologies investigated

Introduction

- **Optimum usage, re-use and recycling** of Materials brought for the mission – in particular **functional polymers** – for the production and the recycling of hardware for maintenance of infrastructure and equipment
  - ☞ Careful Material selection during mission design phases: re-usable, recyclable
  - ☞ Versatile materials and processes to increase maintenance capability
  - ☞ Achieve sustainable settlement: reduce Material waste

- **Additive Manufacturing** (AM) techniques are of high interest as they allow efficient material use, do not require cutting, joining tools and can be automated
  - ☞ **Enabling** technologies

Introduction

- This presentation gives an **overview of relevant activities** supported by and/or conducted within the European Space Research and Technology Center's **TEC-QT division (Components Technology & Space Materials)**

- For these activities, collaboration exists with the European Astronaut Centre's Spaceship EAC's initiative
  - ☞ Spaceship EAC investigates low TRL concepts at an early stage, to address different building blocks of a Human settlement – Moon Village
  - ☞ ESTEC's TEC-QT supports the development of technical solutions allowing the processing Materials in a system perspective
  - ☞ Some commonalities exist between the two ESA establishments and frequent exchanges allow maximising cross benefits of this collaboration and minimising overlaps

In-Situ Resource Utilisation

- Abundant resource to produce construction material for infrastructure and hardware manufacturing: regolith

- Various technologies are investigated to turn regolith into building material

3D Printing of Lunar Base Building Block Using a Mg-based Binder (D-Shape process)

- ESA-funded study (General Studies Programme) 2012
- Consortium: Monolite (UK, printing technology), Alta (Italy, space industry), Scuola Superiore Sant'Anna (Italy, process control), Foster+Partners (UK, architects)

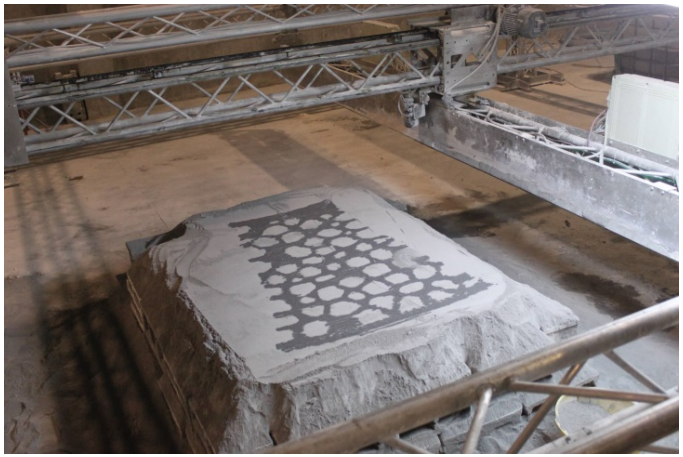

- 3D printing technology: D-Shape process: mix the lunar regolith with a MgO/ $MgCl_2$ binder
- Development of a regolith simulant (DNA)
- Printing experiments under vacuum

3D Printing of Lunar Base Building Block Using a Mg-based Binder (D-Shape process)

- Design of Lunar base concept
- 1.5 ton Lunar base building block demonstrator

- *Challenges:*
  - Binder
  - Regolith behaviour (abrasive, charged, radiation)
  - Mobility (rover)

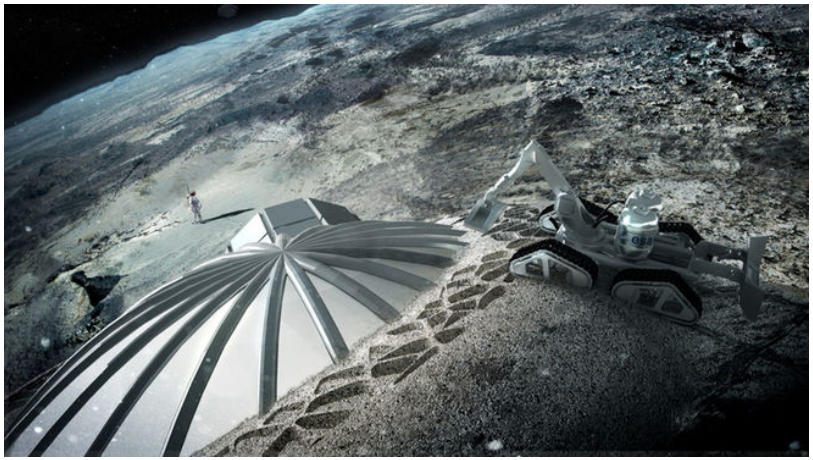

3D Printing of Lunar Base Building Block by Solar Sintering

- ESA-funded study (General Support Technology Programme): 2015 –
- Contractor: DLR (DE)
- 3D printing technology: solar sintering using concentrated solar light
  - ☞ No binder brought from Earth, use of local energy source
- Design of 3D printing equipment and process (Xe high-flux solar simulator)

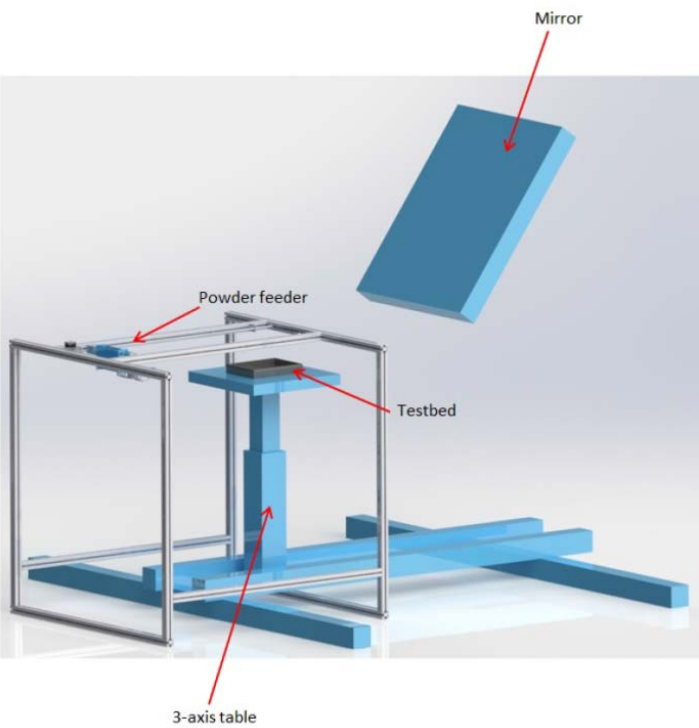

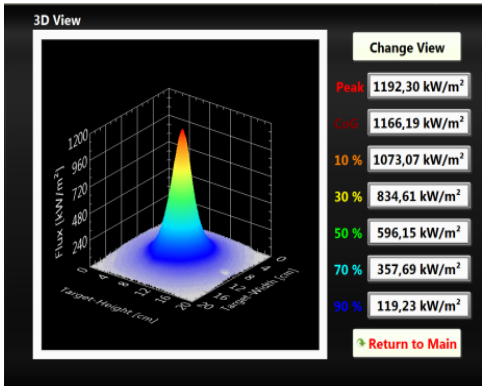

3D Printing of Lunar Base Building Block by Solar Sintering

- Study of scanning strategy and effect on printed material structure
- Characterisation of regolith and sintered material
- *Challenges:*
  - Thermal stresses
  - Regolith behaviour (abrasive, charged, radiation)
  - Effect of vacuum

Sintered brick: 240x120x30 mm^3
JSC-2A regolith simulant
Sintering Time: 5h30. Layer thickness ≈ 0.1 mm

145x65x40 mm^3
JSC-2A regolith simulant

Limited Resources Manufacturing

- ESA-funded study (Basic Technology Research Programme): 2015 –
- Contractor: Fotec (AT)
- Mapping and trade-off of ISRU technologies for hardware manufacturing
- Programming of tool for technology trade-off using weighted criteria

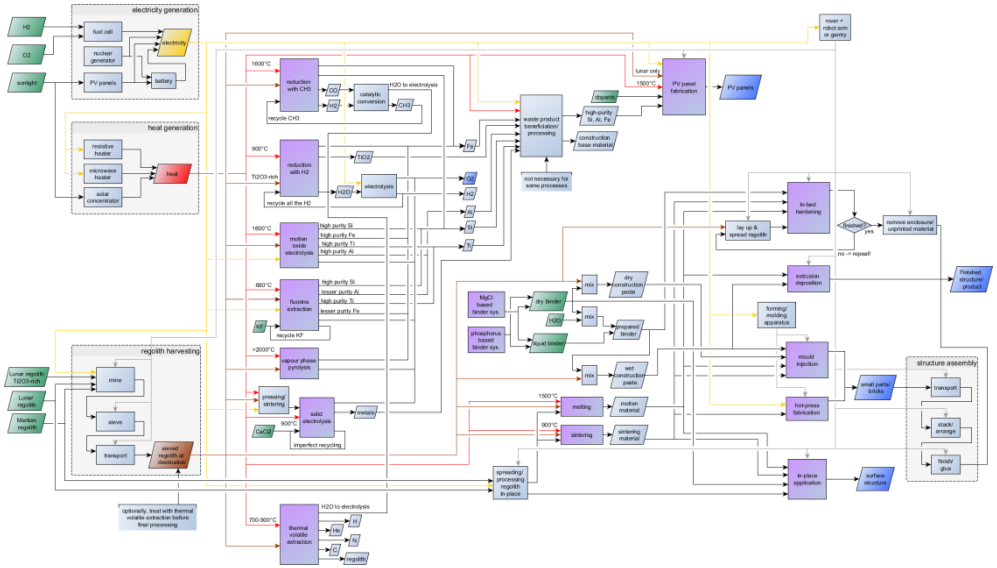

Full map of process diagrams

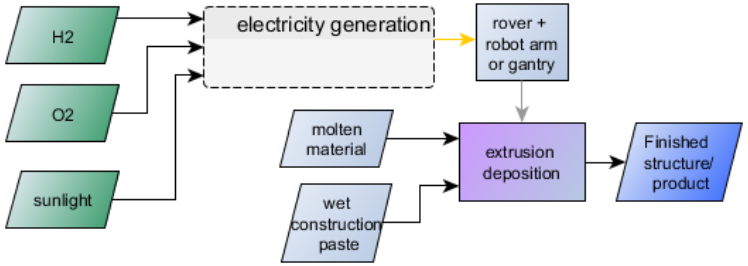

Extrusion-deposition process diagram

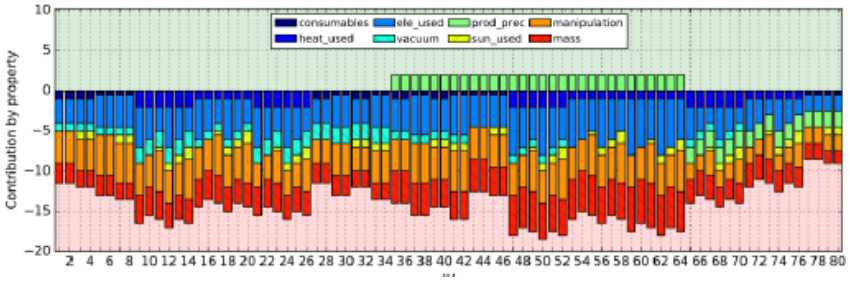

Example of trade-off

Limited Resources Manufacturing

- Selection and demonstration of hardware manufacturing process:
  - Extrusion-deposition of regolith-based paste
  - Binder: concentrated phosphoric acid
  - Martian Regolith Simulant used, but process adaptable to Lunar Regolith
- Challenges: binder ratio, stickiness of paste

Early trials of extrusion of paste produced from concentrated phosphoric acid and JSC Mars-1a Martian regolith simulant. Acid:Regolith simulant ratio: left: 0.6:1 ; right 1:1. Process is being optimised to minimise ratio.

Usage and Recycling of Transported Materials for Hardware Manufacturing

- Use of available materials to manufacture hardware for maintenance of infrastructure and equipment
- Materials need to be recyclable:
  - ☞ To be turned into new hardware when needed ⇒ increased maintenance capability
  - ☞ To reduce waste ⇒ sustainable settlement
- Polymers:
  - ☞ Recyclable
  - ☞ Low melting point ⇒ lower energy required for melting
  - ☞ Can be functionalised (e.g. conductive) ⇒ address multiple maintenance needs

3D Printing with Engineering Thermoplastics

- Poly(ether ether ketone) - PEEK
- Thermal stability: Tm = 343°C
- Mechanical Pties: σtensile = 100 Mpa, E = 3.8 Gpa
- 3D printing technique: fused filament fabrication

- Study of mechanical properties and internal structure for various build orientations:
- 80 % of theoretical mechanical properties achieved for XY orientation
- Thermo-chemical property consistency with raw material
- Higher porosity and lower mechanical properties in Z direction
- Process modification needed to improve interlayer adhesion

MECHANICAL ANALYSIS

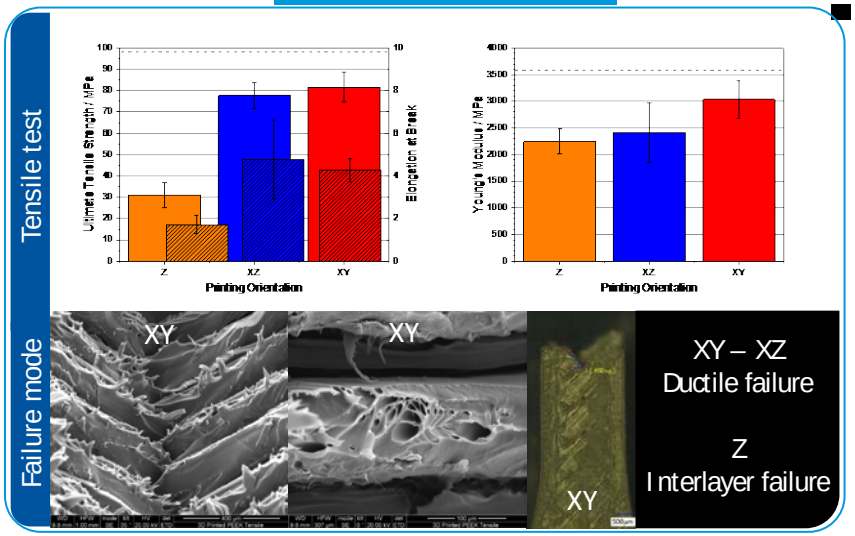

3D Printing with Engineering Thermoplastics

- **ESA - General Support Technology Programme project :**
- **Production of conductive engineering thermoplastics based of graphene technology**
  - ☞ Plastics as electrical conductor
  - ☞ Running phase: 1st Q-2016 to 3rd Q-2016

- **ESA – Networking and Partnering Initiative project :**
- **Development of multifunctional engineering thermoplastics**
  - ☞ Running phase: 2015 to 2017

In-Orbit 3D Printing

- **ESA - Basic Technology Research Programme project MELT:**
- **Breadboard development for in-orbit demonstration of additive layer manufacturing technologies**
  - Contractors: OHB/Active Space Technology/BEEVERYCREATIVE
  - Zero G - Engineering thermoplastics - High aspect ratio
  - Running phase: 3rd Q-2015 to 4th Q-2017

THERMOPLASTICS AND STRUCTURES
THERMOPLASTICS AND FUNCTIONAL PART

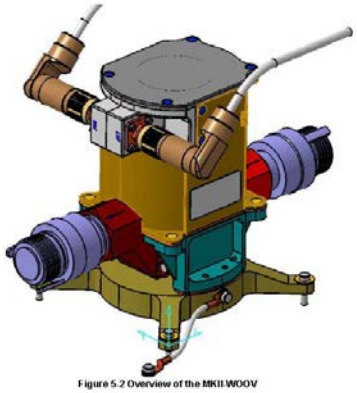

Figure 5.2 Overview of the MKII WOOV

Future ?

ON-THE-MOON AND ON-PLANET 3D PRINTING

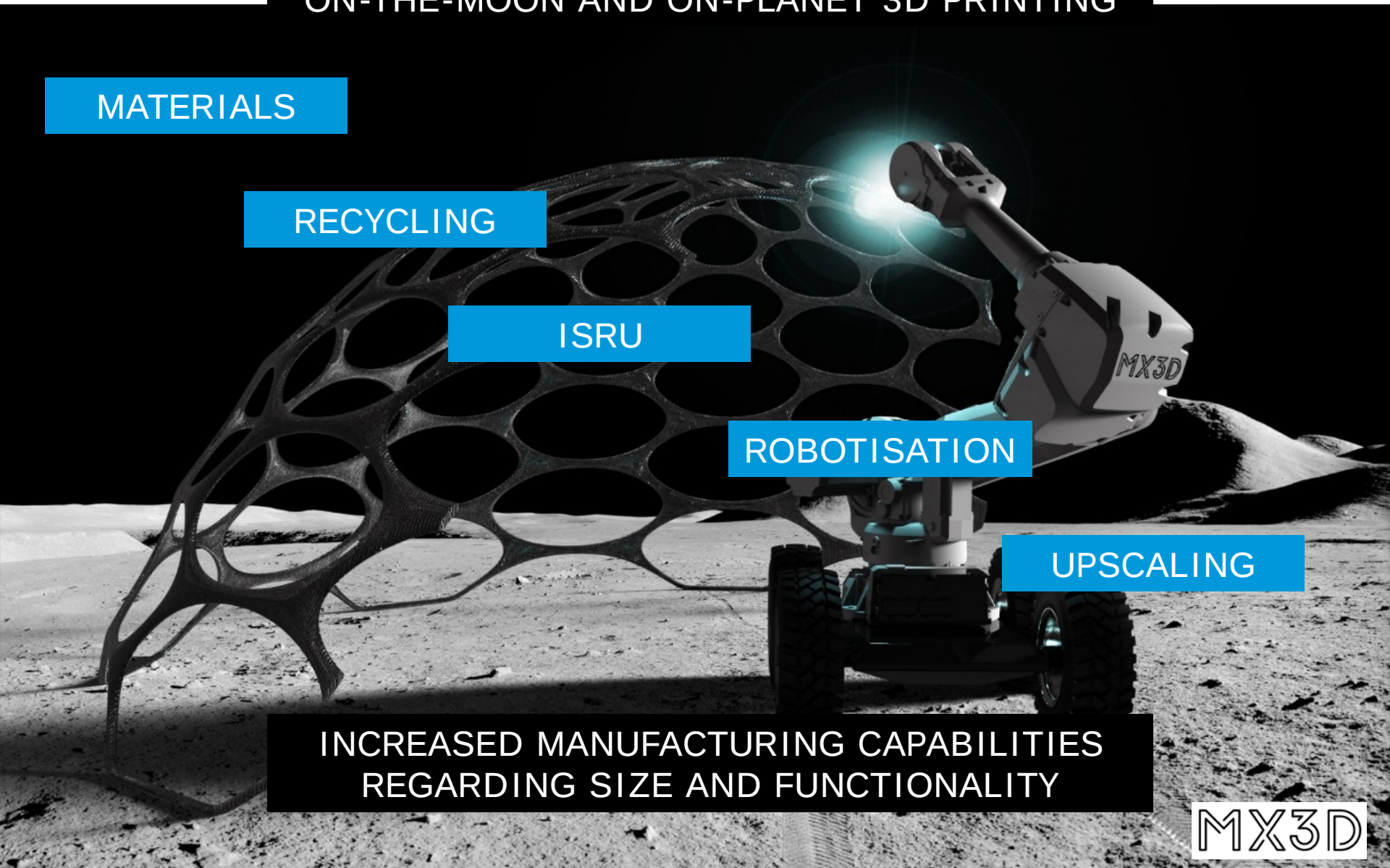

MATERIALS

RECYCLING

ISRU

ROBOTISATION

UPSCALING

INCREASED MANUFACTURING CAPABILITIES
REGARDING SIZE AND FUNCTIONALITY

MX3D

Conclusions

- **Materials** aspects need to be part of a **system-level** view at the **early stages** of conceiving Moon missions for exploration and Human settlement
  - Selection of transported materials for re-use and recycling
  - Consideration of ISRU (required equipment, energy needs, mission location)

- **Additive Manufacturing** technologies are enabling elements for the establishment of **sustainable** Human settlements

- Various technologies for Material utilisation exist or are being developed

☞ **Combination** of several **technologies** for various purposes (infrastructure, hardware, large scale, small objects) should be combined in order to make full use of the available Materials to achieve the missions objectives

Acknowledgements

Jessica Grenouilleau	ESA – HSO-IDR
Derek Aranguren van Egmond	McGill University
Marriana Rinaldi	Univ. Tor Vergata Roma
Stefan Siarov	TU Delft
Brando Okolo	INDMATEC GmbH
Anna Daurskikh	Active Space Technologies GmbH
Gijs van der Velden	MX3D
Joris Laarman	JORIS LAARMAN LAB
Xavier de Kestelier	Foster+Partners
Enrico Dini	Monolite
Valentina Colla	Scuola Superiore Sant'Anna
Giovanni Cesaretti	Alta
Matthias Sperl	DLR
Alexandre Meurisse	DLR
Christoph Buchner	Fotec
Roland Pawelke	Fotec

Thank you for your attention

Questions?